Telecaster Deluxe Wiring

2 Volume, 2 Tone
Gibson Lead
3-Way Right Angle Toggle Switch

Note: No jumpers are depicted. Make sure all metal is properly grounded.

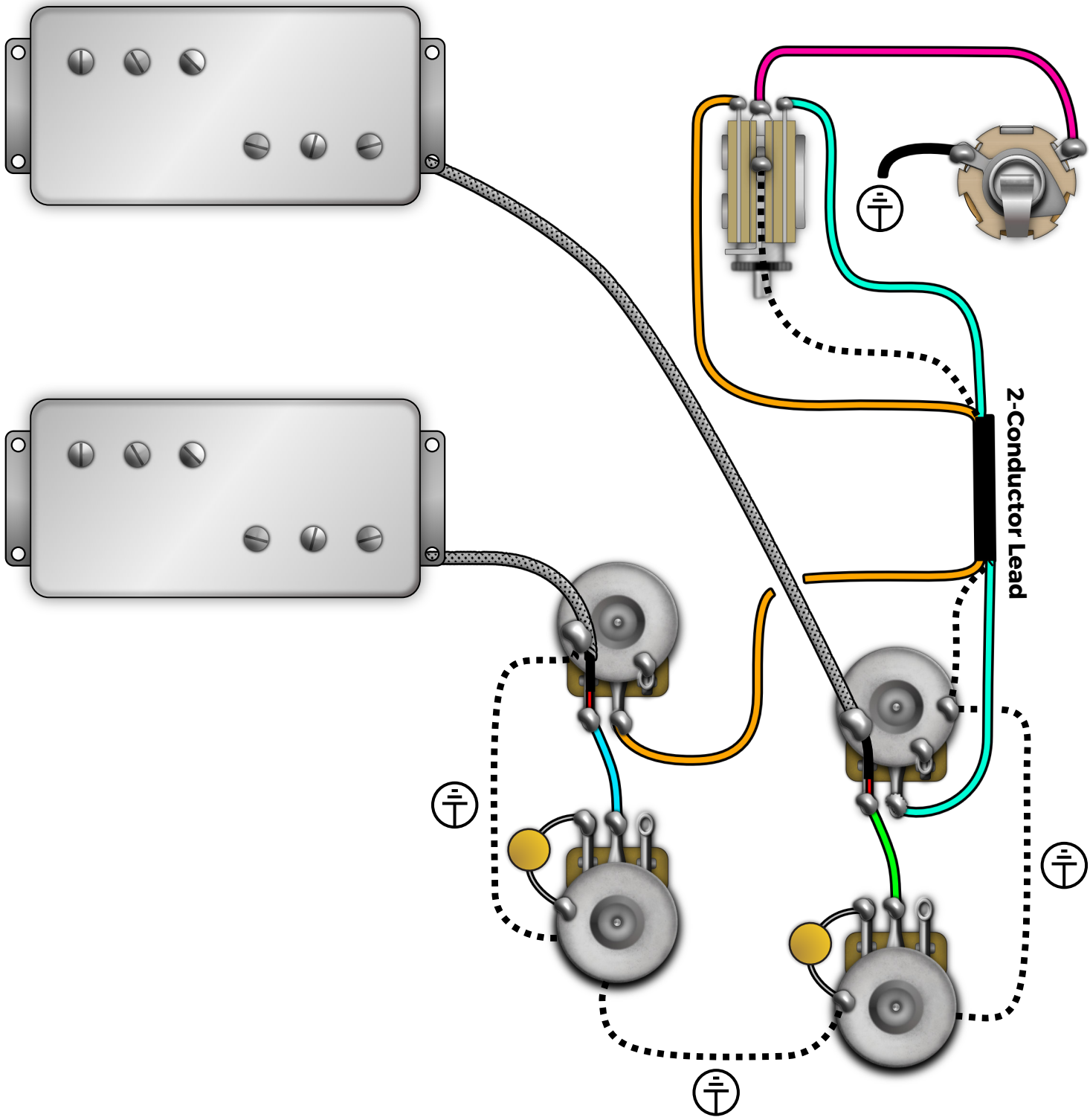

(C) 2018-2019 Lindy Fralin Pickups, LLC. All Rights Reserved.